REVISIONS			
REV	DATE	DESCRIPTION	BY
A	1-17-17	INITIAL RELEASE	AM

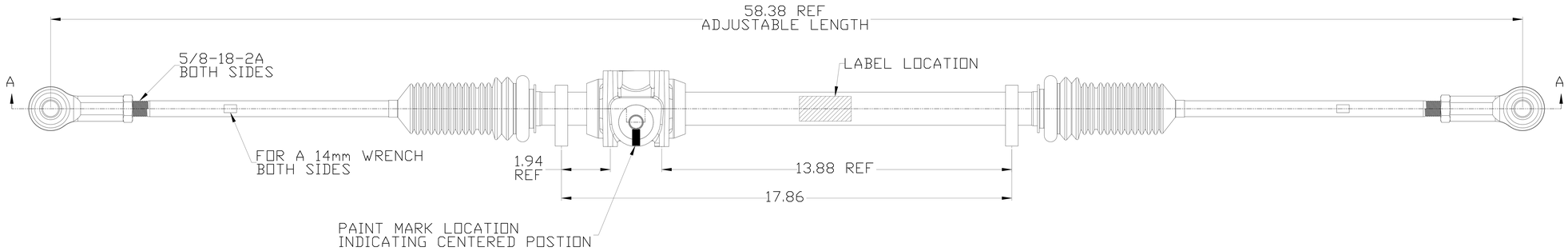

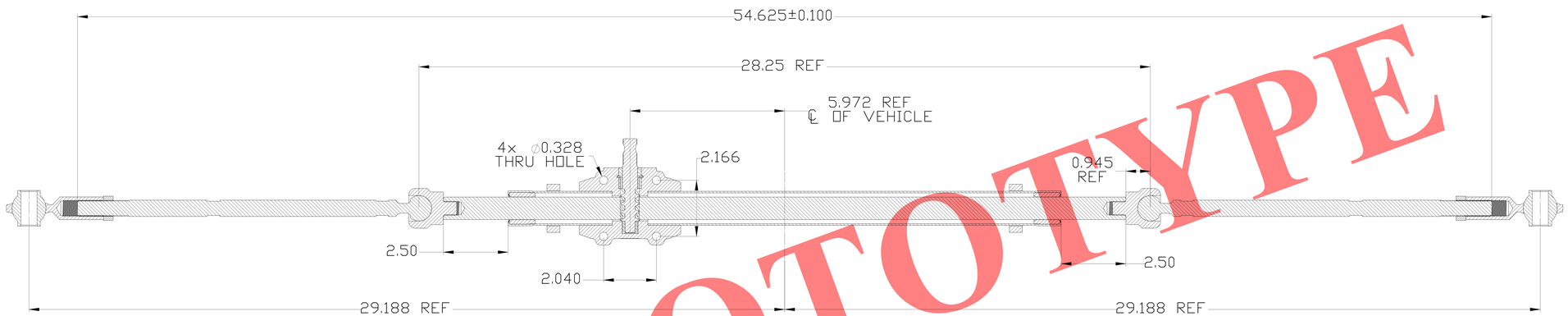

SECTION A-A

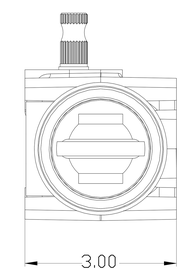

PROTOTYPE

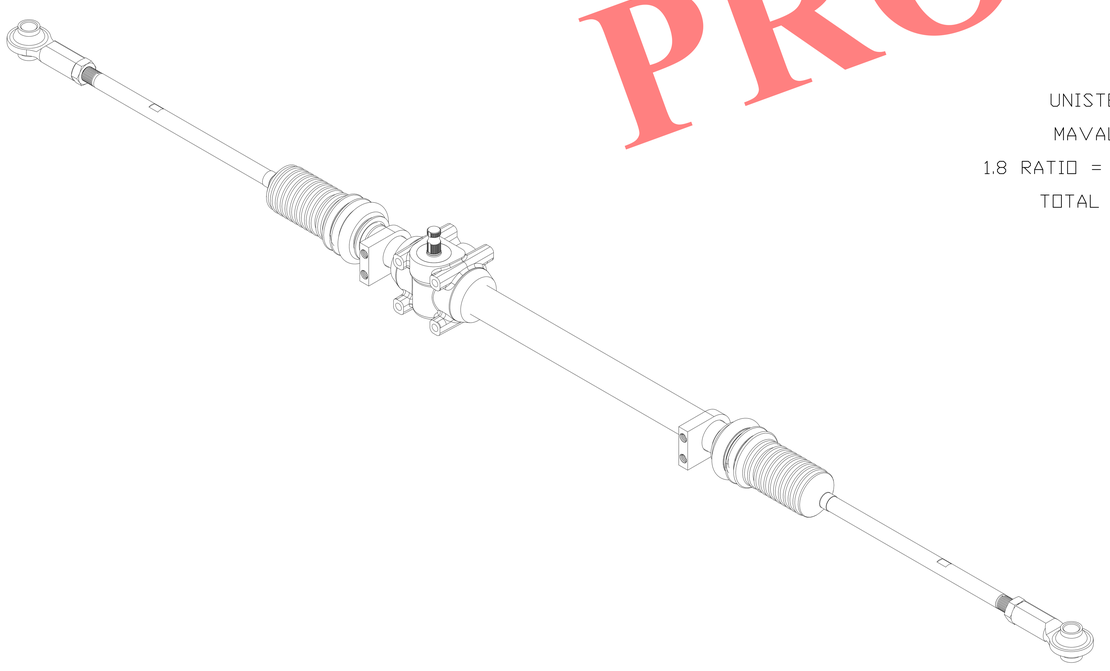

UNISTEER MAIN ASSEMBLY

MAVAL PART NO. 94435M

1.8 RATIO = 2.7 TURNS LOCK TO LOCK

TOTAL TRAVEL = 5 INCHES

X_____

CUSTOMERS SIGNATURE

NOTES: 1) ASSEMBLY TO BE DELIVERED WITH RACK CENTERED AND PAINT MARK ON PINION SHAFT TO VISUALLY IDENTIFY THE CENTERED POSITION.
2) ASSEMBLY WILL WITHSTAND 96 HRS ASTM B117 SALT SPRAY TEST WITH NO RED RUST.

TOLERANCES (INCHES)
For all dimensions except where otherwise specified.
DECIMALS .X±0.060
.XX±0.055
.XXX±0.050
ANGLES ±2°

CONFIDENTIAL
This print and the specifications are the property of MAVAL INDUSTRIES, L.L.C. and/or its customer, and has been issued with the understanding that it will not be reproduced, revealed to or used for manufacture for others, and will be returned upon request.

MATERIAL:

DATE: 1-17-17

DRAWN BY: AM

USED ON:

MAVAL INDUSTRIES, L.L.C.
1555 Enterprise Parkway
Twinsburg, Ohio 44087-0156
www.mavalgear.com

TITLE: UNISTEER MAIN ASSY.

CAD FILE:	CUSTOMER:	REV
94435M	SUPERLITE APEX	P1