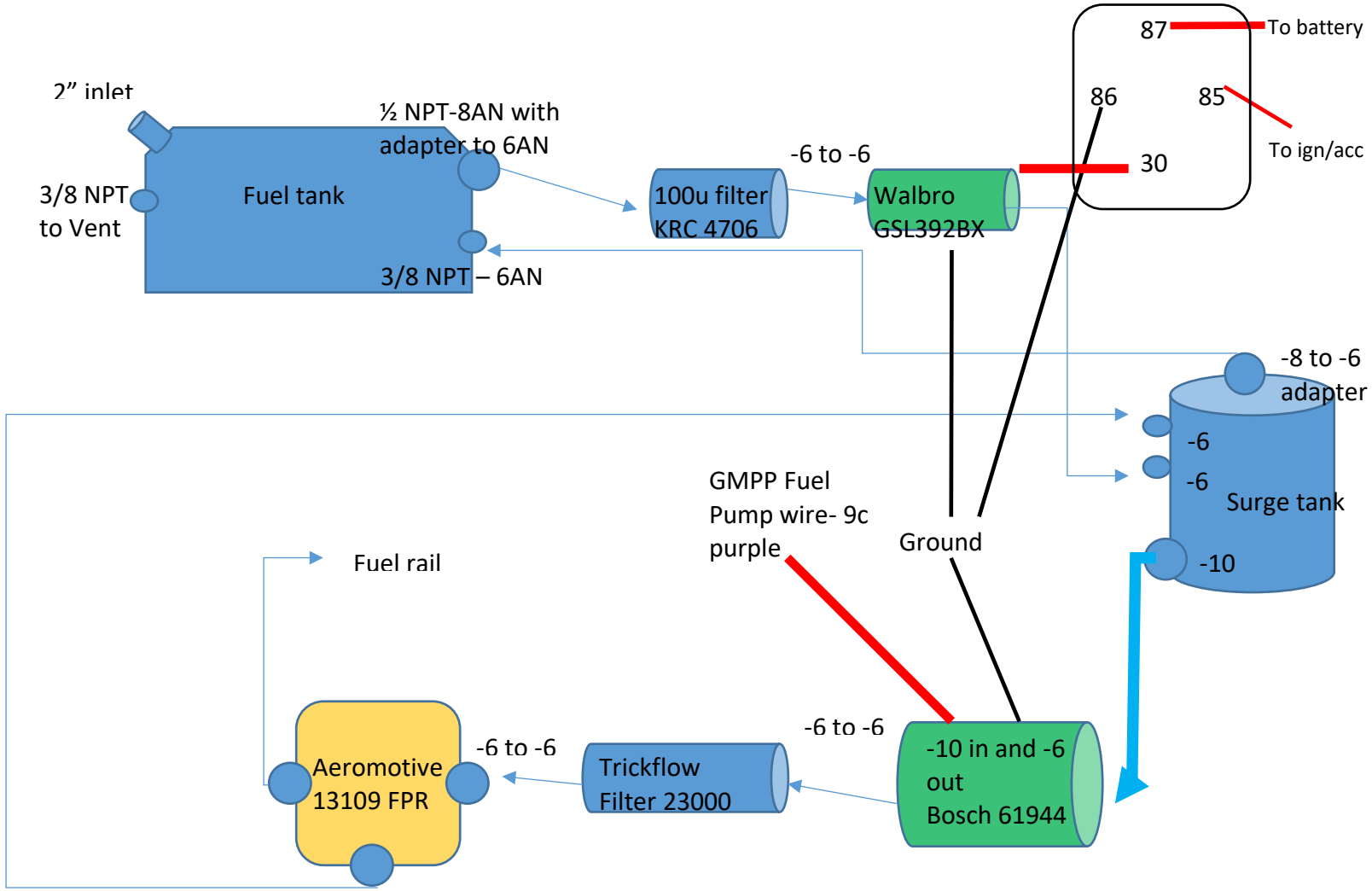


All fittings and line is except surge tank to Bosch inlet at -10AN.