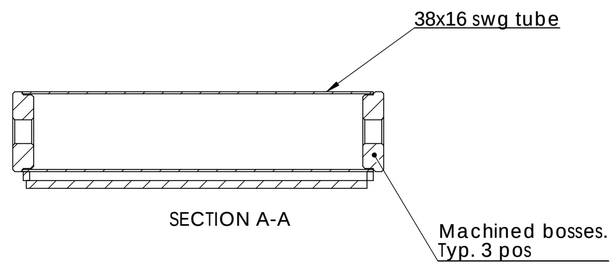

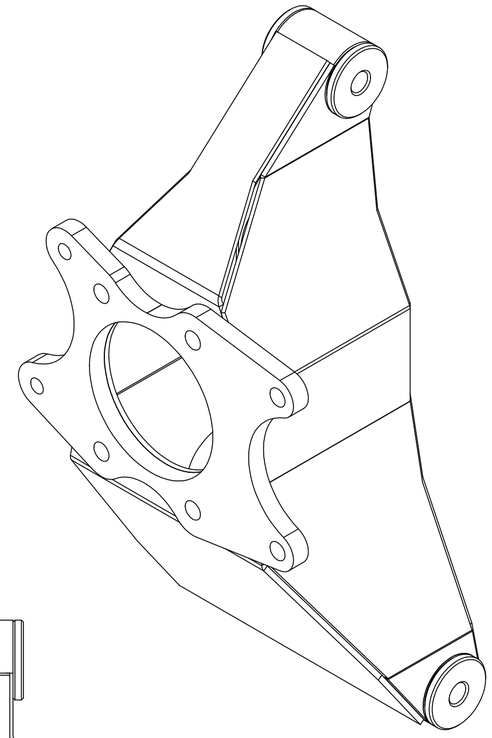

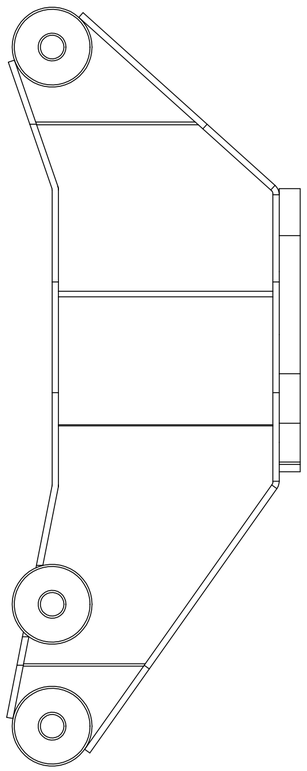

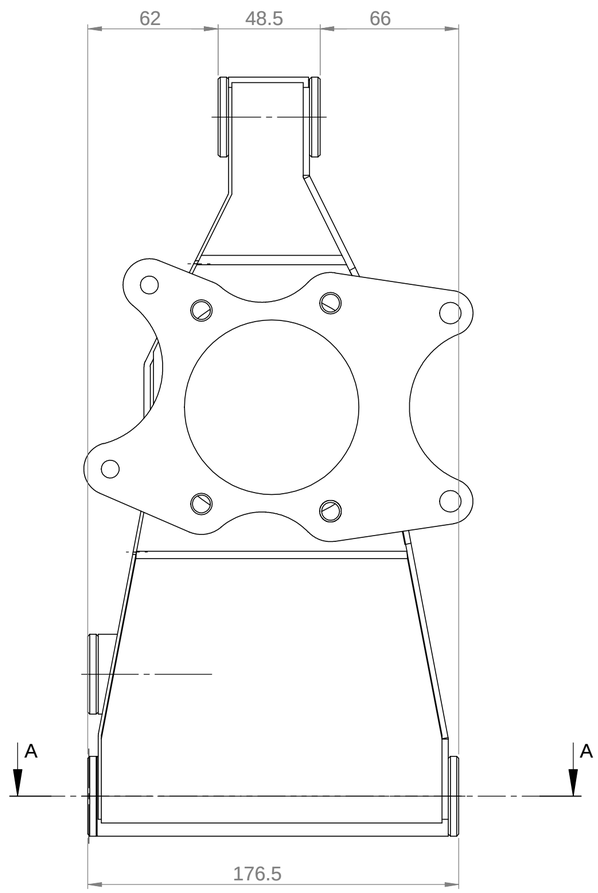

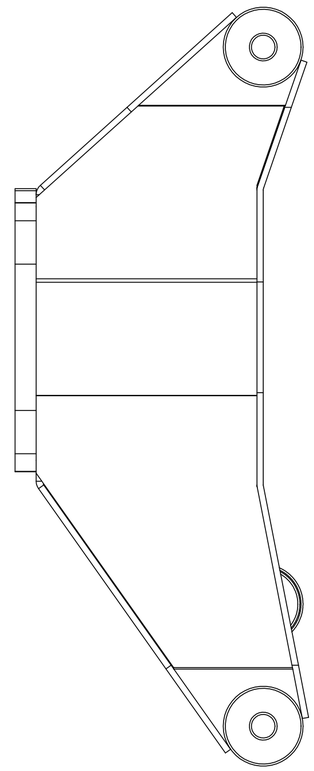

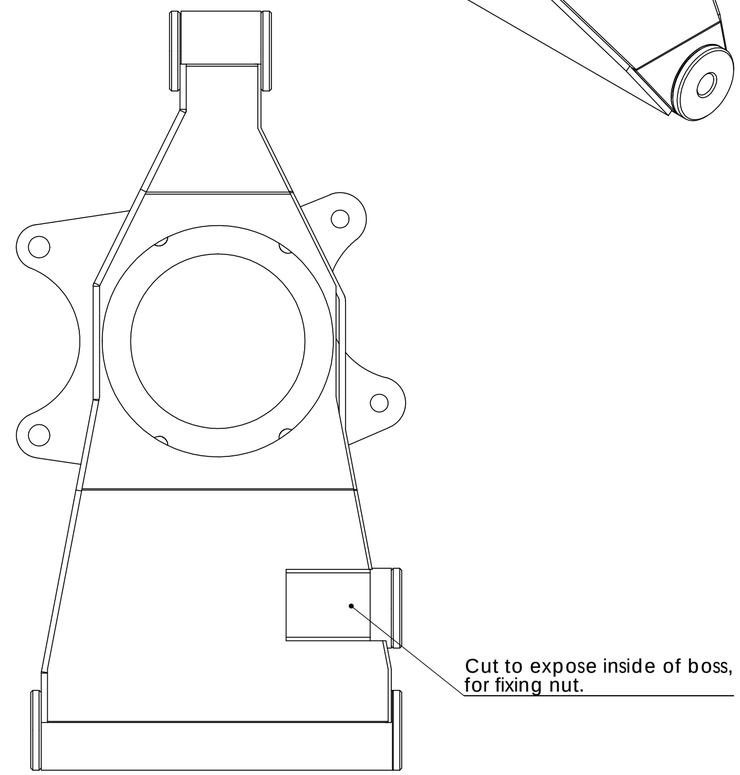

Nearside Upright Shown, Offside symm.

UNLESS OTHERWISE SPECIFIED: DIMENSIONS ARE IN MILLIMETERS SURFACE FINISH: TOLERANCES: LINEAR: ANGULAR:	FINISH:		DEBUR AND BREAK SHARP EDGES	DO NOT SCALE DRAWING	REVISION
	NAME	SIGNATURE	DATE	TITLE:	
DRAWN					
CHK'D					
APPV'D					
MFG					
Q.A			MATERIAL:	DWG NO. gts40-rear-upright-assembly-mk	A3
			WEIGHT:	SCALE:1:2	SHEET 1 OF 1

PDF created with pdfFactory Pro trial version www.pdffactory.com