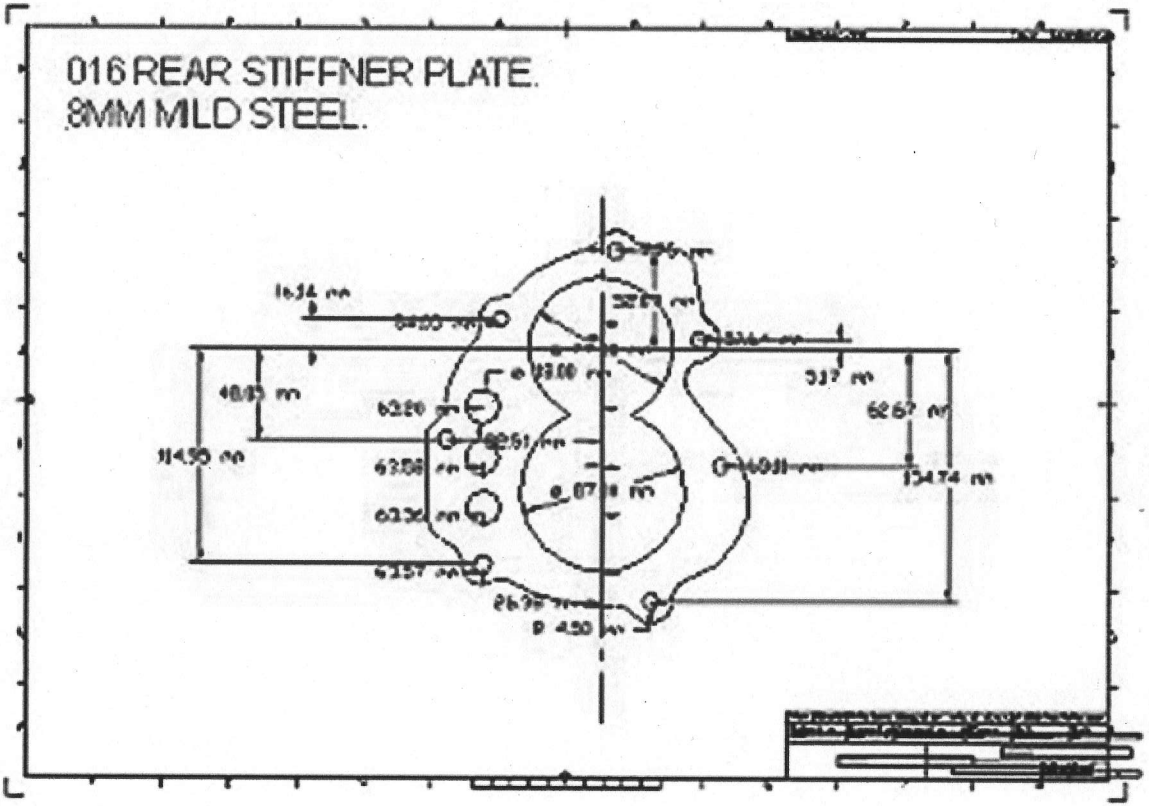
016 REAR STIFFNER PLATE.
8MM MILD STEEL.